3. Intake Manifold

A: REMOVAL

1) Set the vehicle on a lift.
2) Release the fuel pressure. <Ref. to FU(H4DOTC)-55, RELEASING OF FUEL PRESSURE, PROCEDURE, Fuel.>
3) Disconnect the ground cable from the battery.

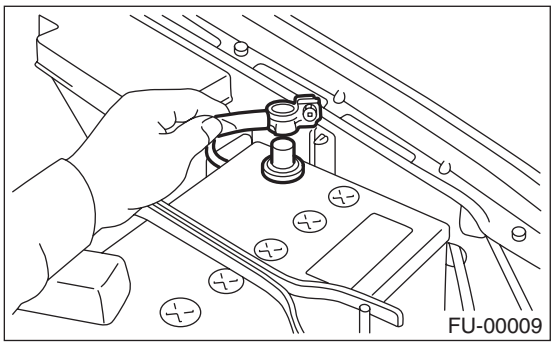

4) Open the fuel filler flap lid, and remove the fuel filler cap.
5) Lift up the vehicle.
6) Remove the under cover.
7) Drain approximately 3.0 ℓ (3.2 US qt, 2.6 Imp qt) of coolant.

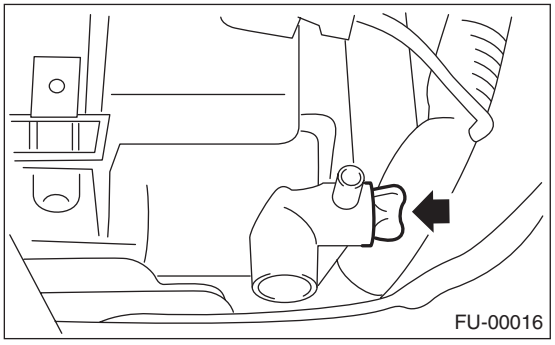

8) Remove the air cleaner upper cover and air intake boot. <Ref. to IN(H4DOTC)-10, REMOVAL, Air Cleaner Case.>
9) Remove the air cleaner element.
10) Remove the intercooler. <Ref. to IN(H4DOTC)-13, REMOVAL, Intercooler.>
11) Remove the coolant filler tank. <Ref. to CO(H4DOTC)-35, REMOVAL, Coolant Filler Tank.>
12) Remove the power steering pump.
    (1) Remove the front V-belt. <Ref. to ME(H4DOTC)-44, REMOVAL, V-belt.>
    (2) Disconnect the power steering switch connector.

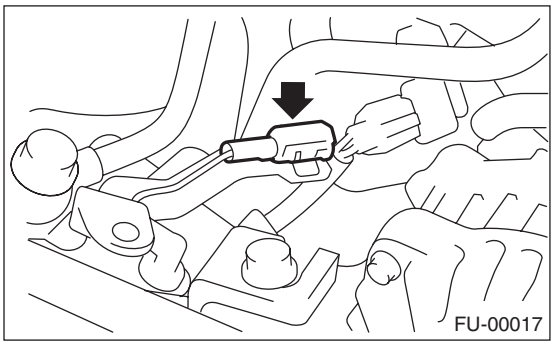

    (3) Remove the bolts which install the power steering pipe bracket to the intake manifold.

NOTE:
Do not disconnect the power steering hose.

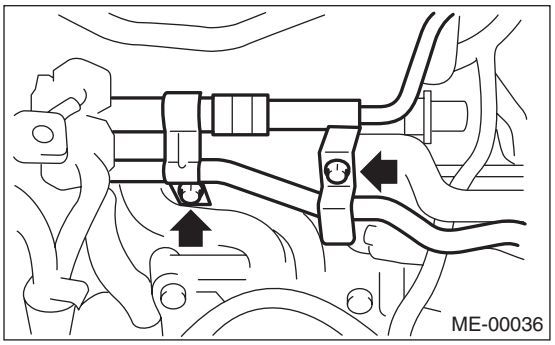

    (4) Remove the bolts, which install power steering pump bracket.

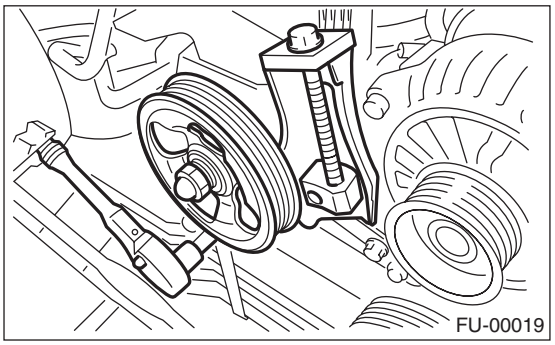

    (5) Remove the reservoir tank from the bracket by pulling it upward.

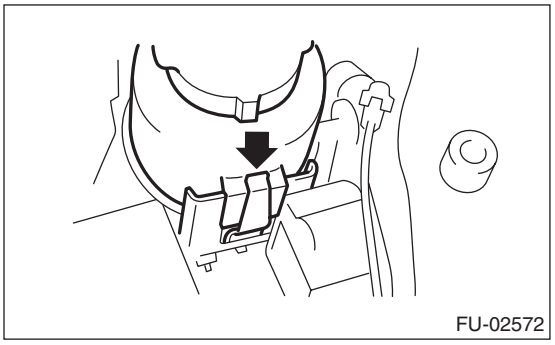

(6) Place the power steering pump on the right side wheel apron.

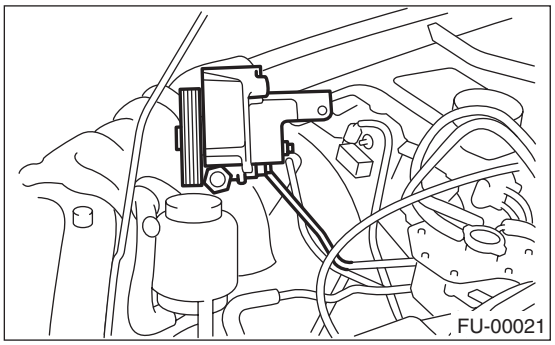

13) Disconnect the emission hose (A) and the connector (B) from the PCV hose assembly.

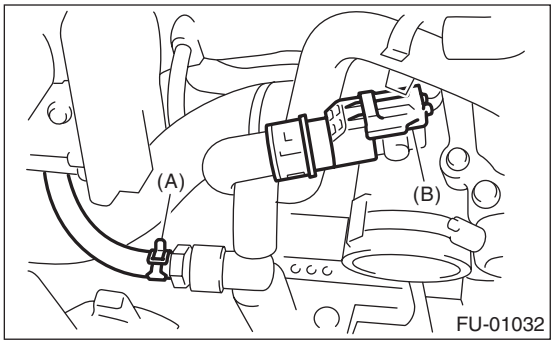

14) Disconnect the engine coolant hose from throttle body.

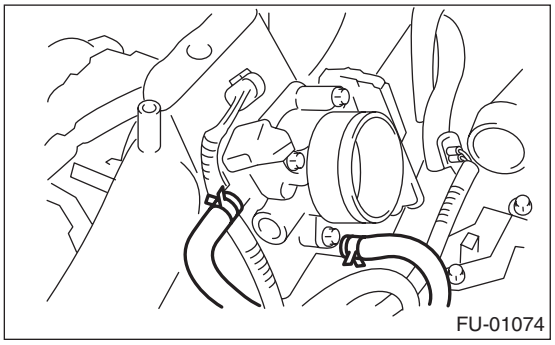

15) Disconnect the brake booster hose.

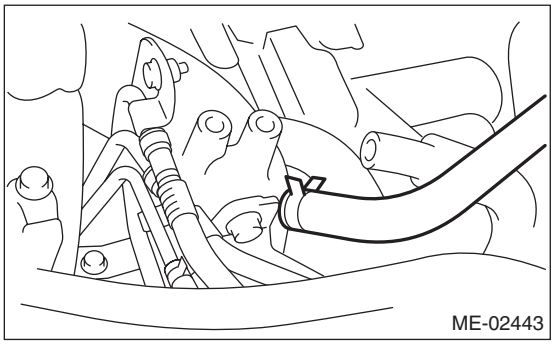

16) Disconnect the pressure hose from the intake duct.

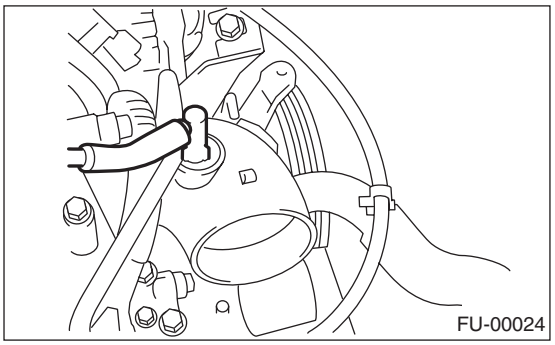

17) Disconnect the engine harness connectors from the bulk head harness connector.

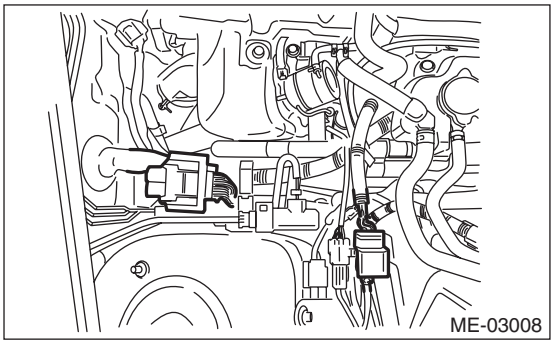

18) Disconnect the connectors from the engine coolant temperature sensor (A), oil pressure switch (B) and crankshaft position sensor (C).

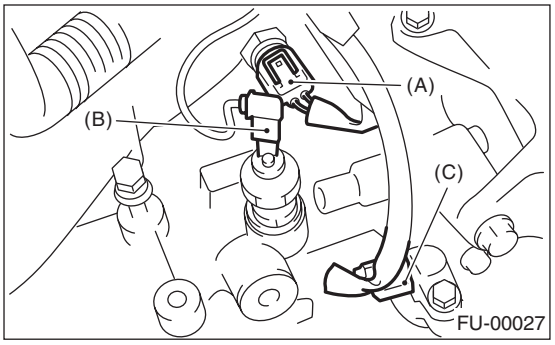

19) Disconnect the knock sensor connector.

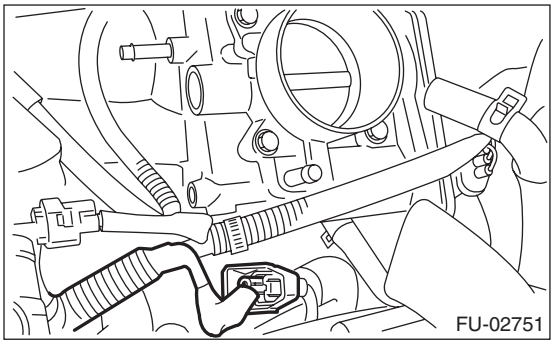

20) Disconnect the connector from the camshaft position sensor.

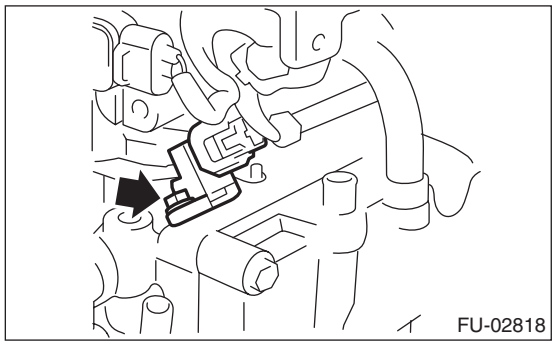

21) Disconnect the connector from the oil flow control solenoid valve.

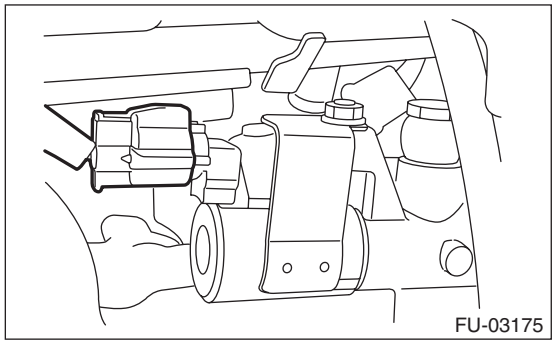

22) Disconnect the connector from the secondary air combination valve.
23) Disconnect the connector from ignition coil.
- RH side

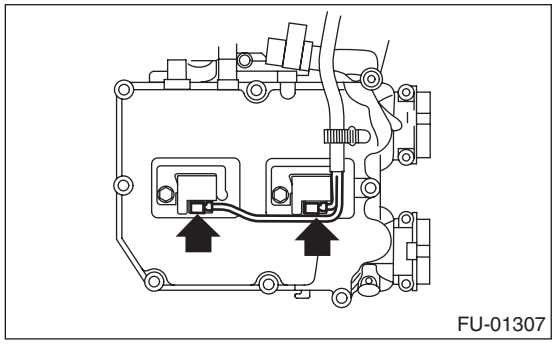

- LH side

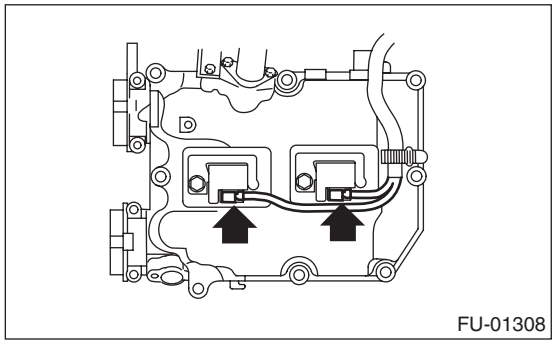

24) Disconnect the engine harness fixed with clip (A) from the rocker cover.
- RH side

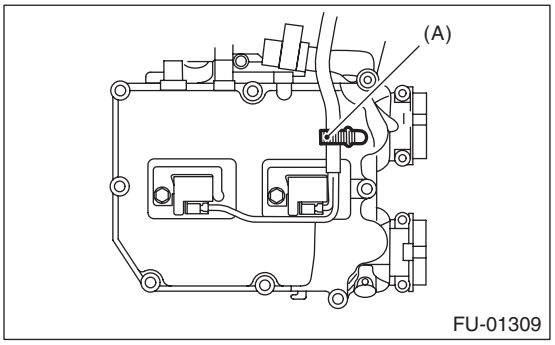

- LH side

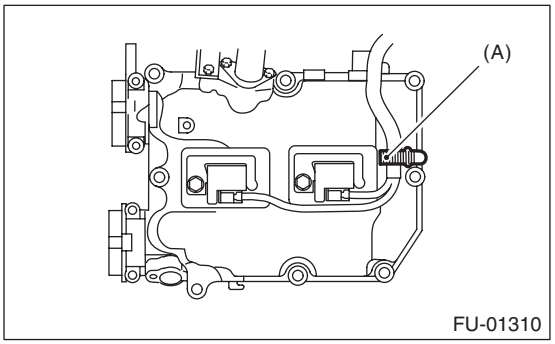

25) Disconnect the fuel hoses from the fuel pipes using the ST. <Ref. to FU(H4DOTC)-70, REMOVAL, Fuel Delivery, Return and Evaporation Lines.>
ST 42099AE000 CONNECTOR REMOVER

CAUTION:
- **Be careful not to spill fuel.**
- **Catch the fuel from hoses using a container or cloth.**

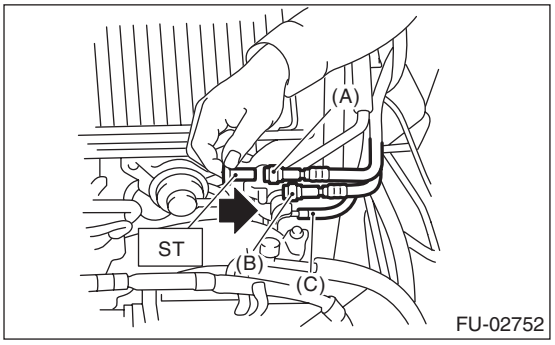

(A) Fuel delivery hose
(B) Return hose
(C) Evaporation hose

26) Remove the bolts which hold the tumble generator assembly onto the cylinder head.

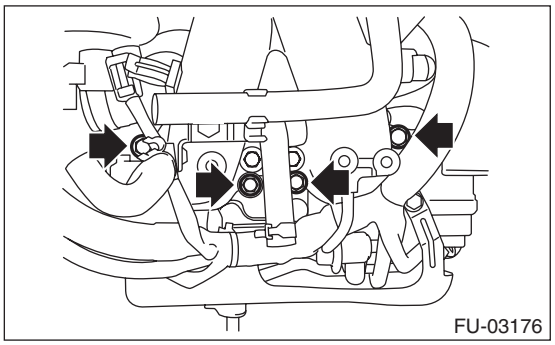

27) Remove the intake manifold.

B: INSTALLATION

1) Install the intake manifold onto cylinder heads.

NOTE:
Use a new gasket.

Tightening torque:
25 N·m (2.5 kgf-m, 18.1 ft-lb)

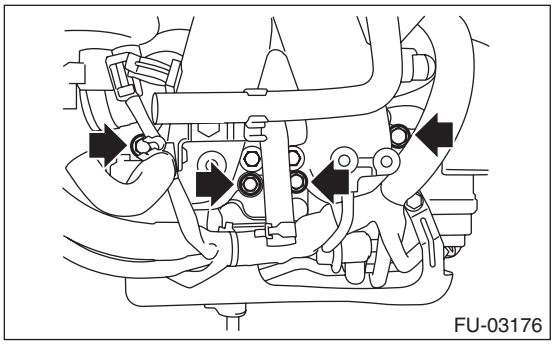

2) Connect the fuel delivery hose, return hose, and evaporation hose.

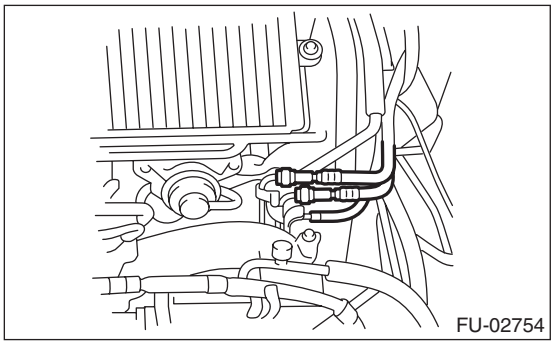

3) Connect the connector to the engine coolant temperature sensor (A), oil pressure switch (B) and crankshaft position sensor (C).

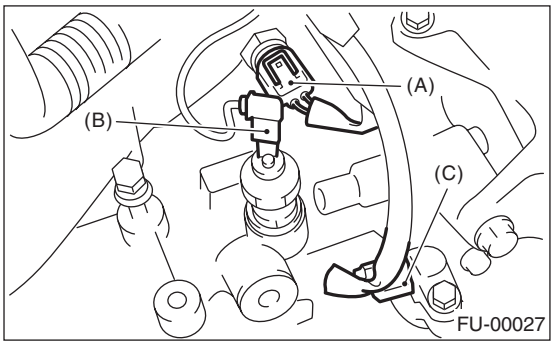

4) Connect the connector to the knock sensor.

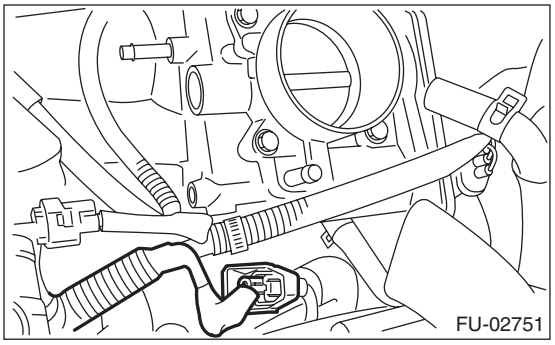

5) Connect the connectors to camshaft position sensor.

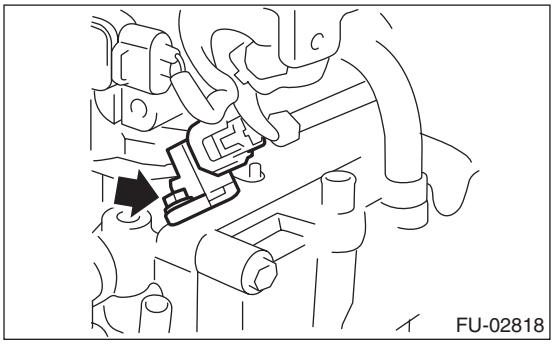

6) Connect the connector to the oil flow control solenoid valve.

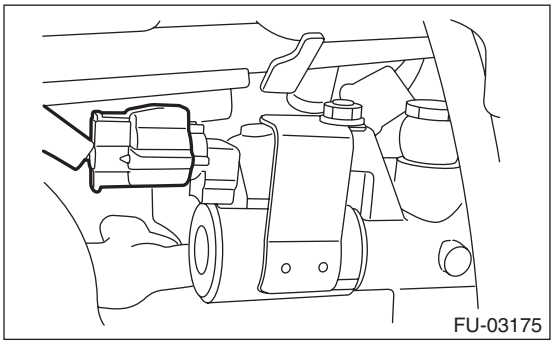

7) Connect the connector to the secondary air combination valve.

8) Connect the connector to the ignition coil.
- RH side

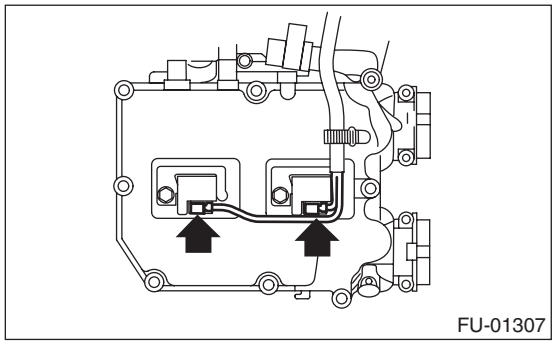

- LH side

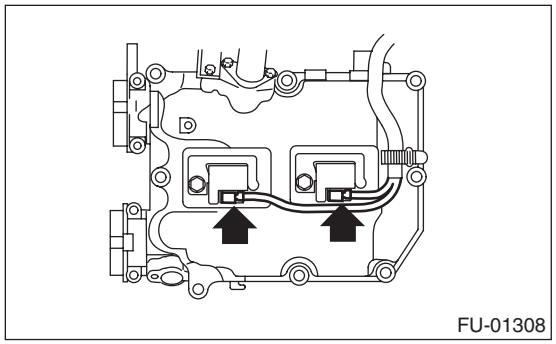

9) Connect the engine harness with clip (A) to the rocker cover.
- RH side

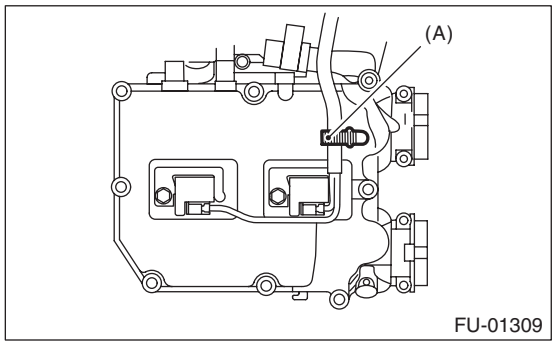

- LH side

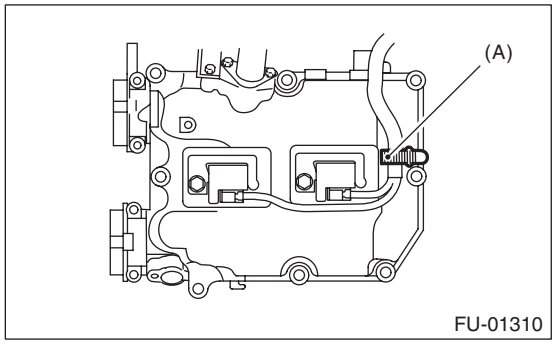

10) Connect the engine harness connectors to the bulkhead harness connectors.

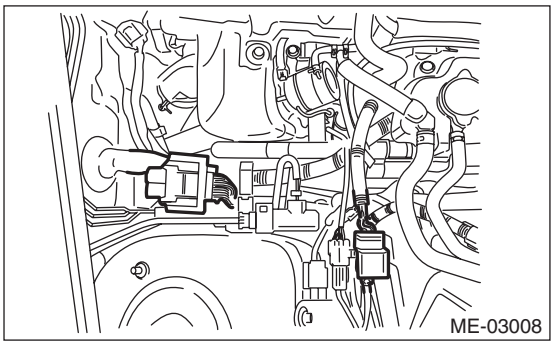

11) Connect the brake booster vacuum hose.

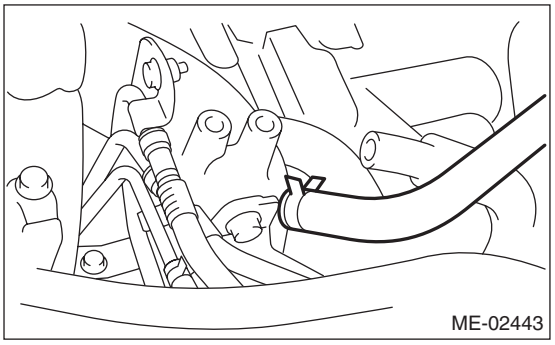

12) Connect the engine coolant hoses to throttle body.

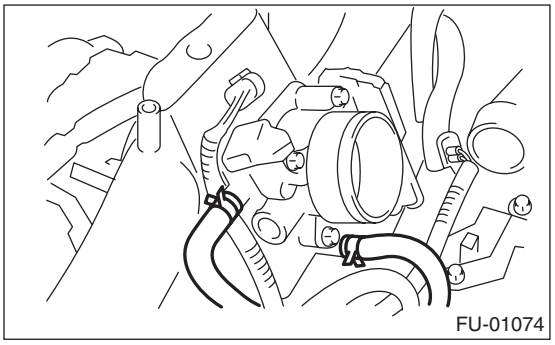

13) Connect the emission hose (A) and the connector (B) to the PCV hose assembly.

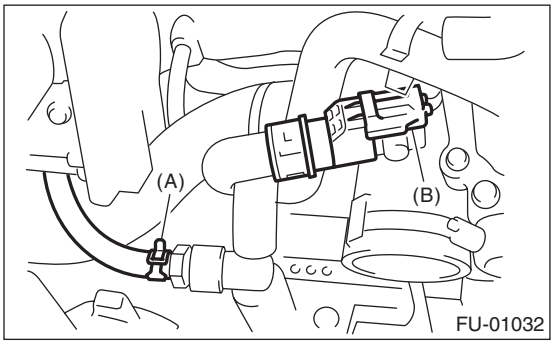

14) Connect the pressure hose to the intake duct.

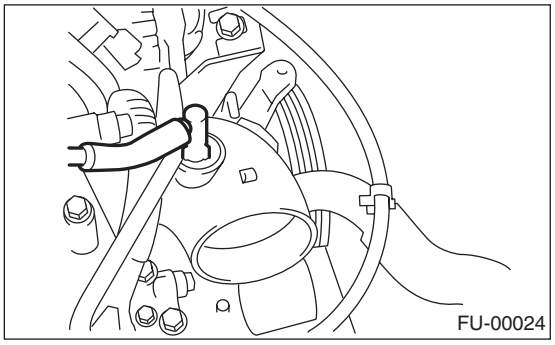

15) Install the power steering pump.
(1) Install the reservoir tank to the bracket.

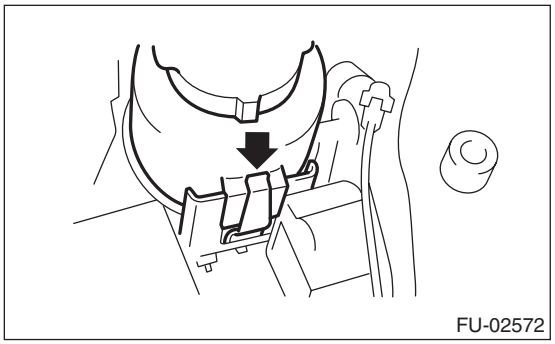

(2) Connect the power steering pump switch to the connector.

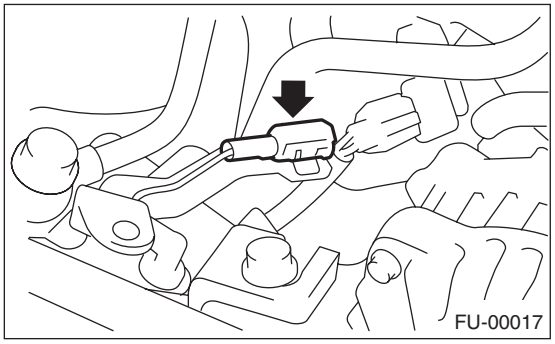

(3) Install the power steering pump. <Ref. to PS-60, INSTALLATION, Oil Pump.>

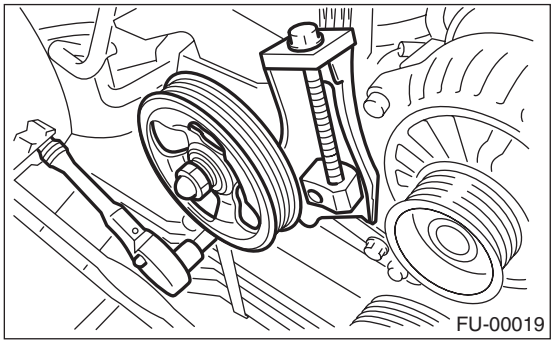

(4) Install the power steering pipe bracket onto the right side intake manifold.

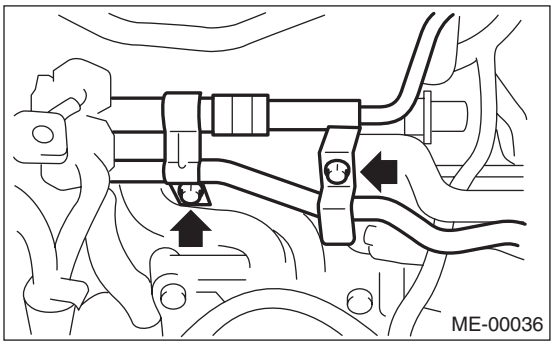

(5) Install the front side V-belt. <Ref. to ME(H4DOTC)-44, INSTALLATION, V-belt.>

16) Install the coolant filler tank. <Ref. to CO(H4DOTC)-35, INSTALLATION, Coolant Filler Tank.>
17) Install the intercooler. <Ref. to IN(H4DOTC)-14, INSTALLATION, Intercooler.>
18) Install the air cleaner element.
19) Install the air cleaner upper cover and air intake duct as a unit. <Ref. to IN(H4DOTC)-10, INSTALLATION, Air Cleaner Case.>
20) Connect the connector to fuel pump relay.

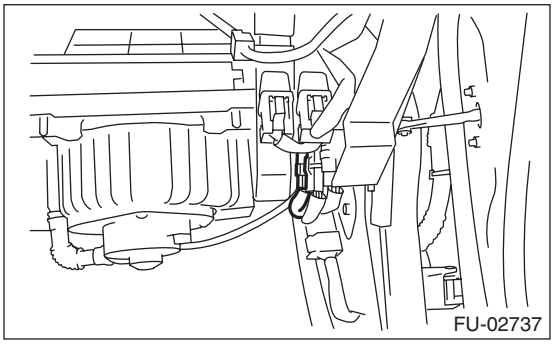

21) Install the passenger's side front side sill cover.
22) Install the glove box. <Ref. to EI-43, INSTALLATION, Glove Box.>
23) Connect the ground cable to the battery.

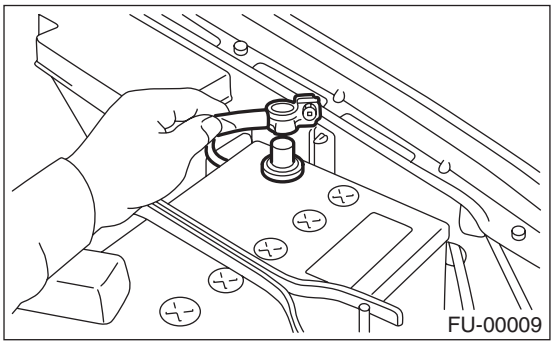

24) Lift up the vehicle.
25) Install the under cover.
26) Fill engine coolant. <Ref. to CO(H4DOTC)-19, FILLING OF ENGINE COOLANT, REPLACEMENT, Engine Coolant.>

C: DISASSEMBLY

1) Remove the fuel pipe protector RH.
- Except for STI model

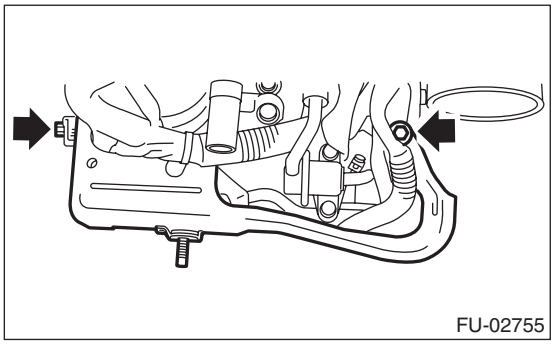

- STI model

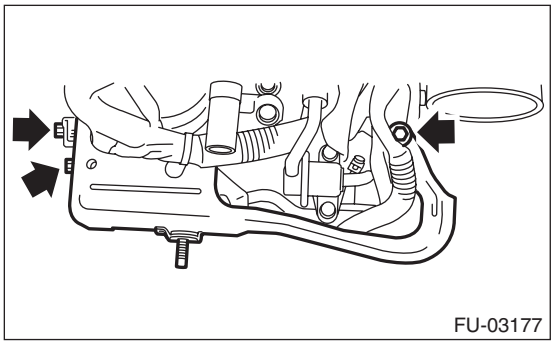

2) Remove the fuel pipe protector LH.
- Except for STI model

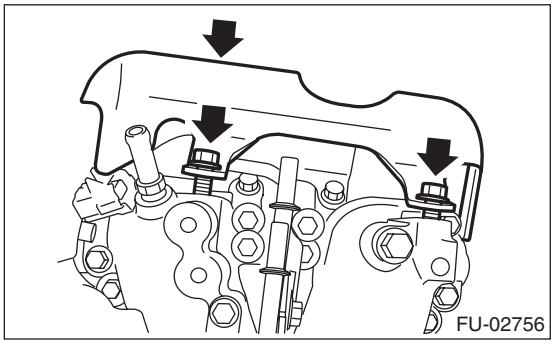

- STI model

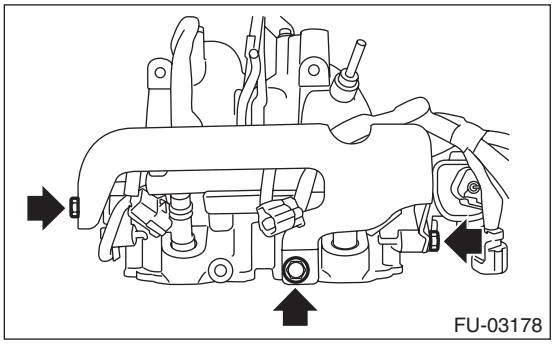

3) Remove the engine ground terminal from the intake manifold.

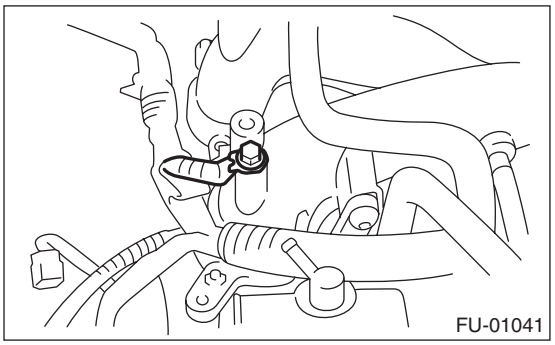

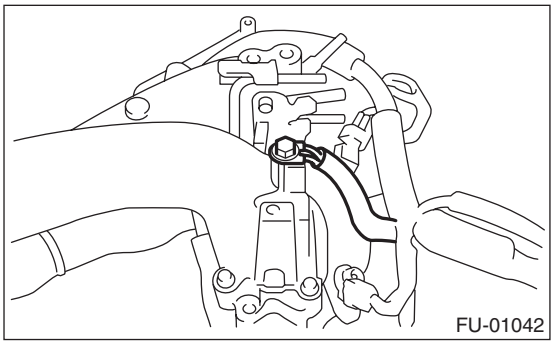

4) Disconnect the connector from the throttle position sensor (A), and the manifold pressure sensor (B).

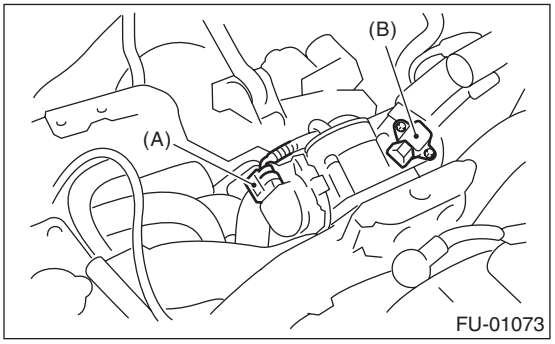

5) Remove the throttle body from intake manifold.

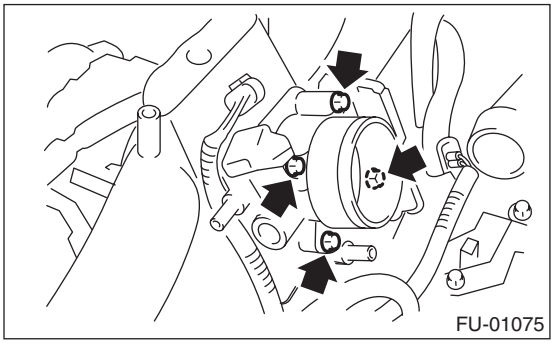

6) Disconnect the connector from fuel injector.

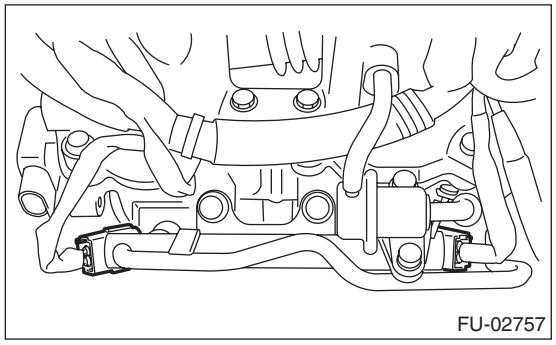

7) Disconnect the connector from the tumble generator valve assembly.

- Except for STI model

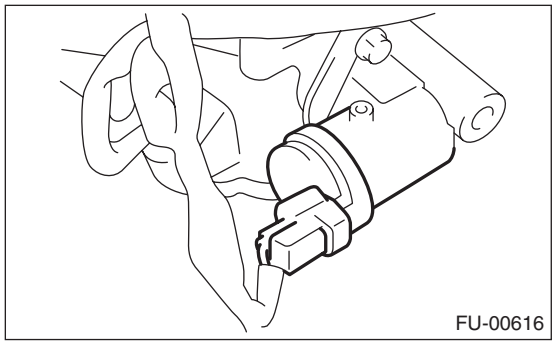

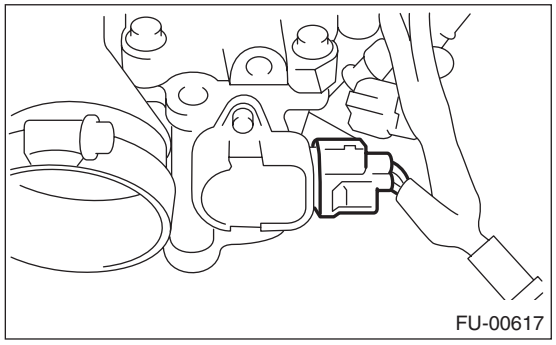

- STI model

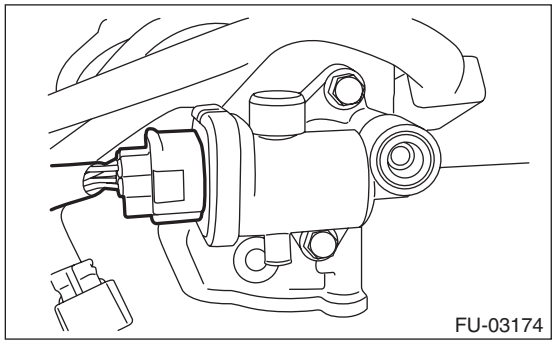

8) Remove the purge control solenoid valve. <Ref. to EC(H4DOTC)-8, REMOVAL, Purge Control Solenoid Valve.>

9) Remove the two bolts which hold fuel pipes on the left side of intake manifold.

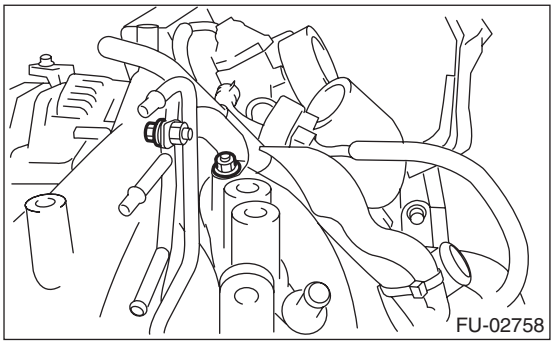

10) Remove the bolt which holds fuel injector pipe onto intake manifold.

- LH side

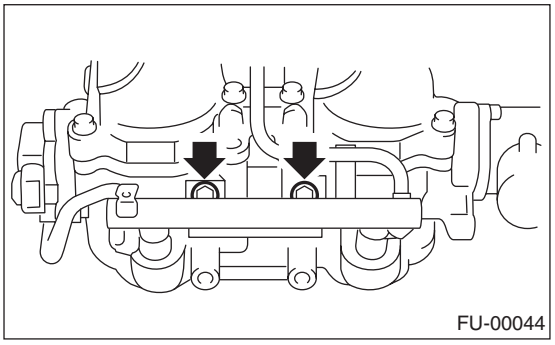

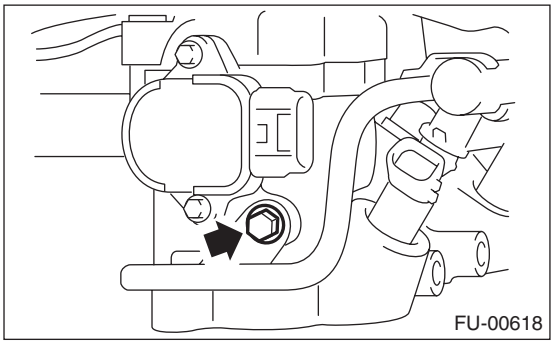

- RH side

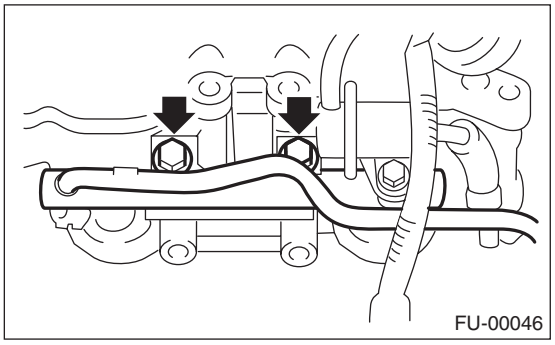

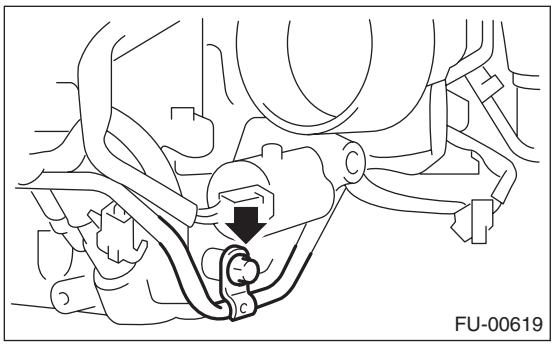

11) Remove the fuel injector.

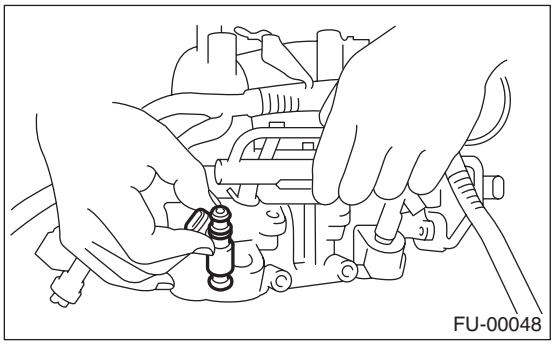

12) Remove the harness bracket which holds the engine harness onto intake manifold.

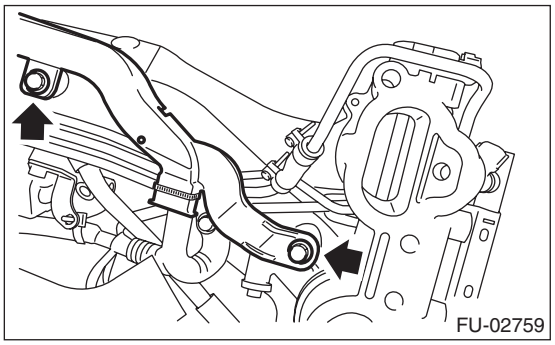

13) Remove the engine harness from intake manifold.

14) Loosen the clamp which holds the front LH side fuel hose to injector pipe to remove the pipe from clamp.

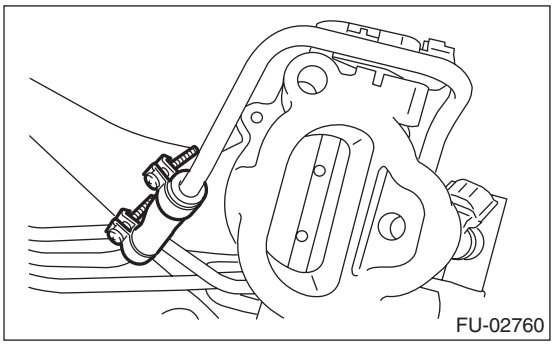

15) Loosen the clamp which holds the RH side fuel hose to injector pipe to remove the pipe from clamp.

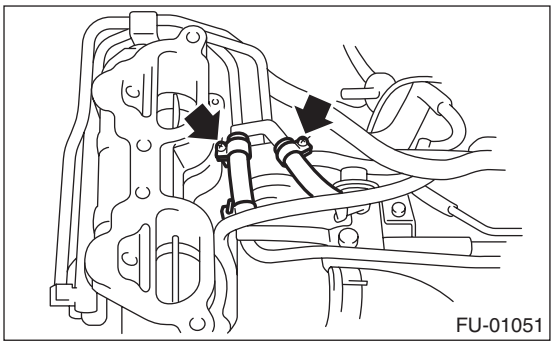

16) Remove the bolts which install fuel pipe assembly on intake manifold.

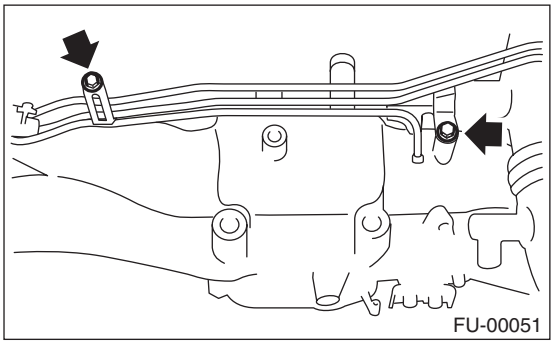

17) Remove the fuel pipe assembly and pressure regulator from intake manifold.

18) Remove the intake duct from intake manifold.

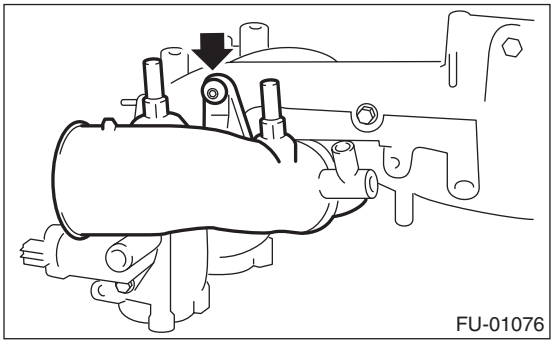

19) Remove the tumble generator assembly from intake manifold.

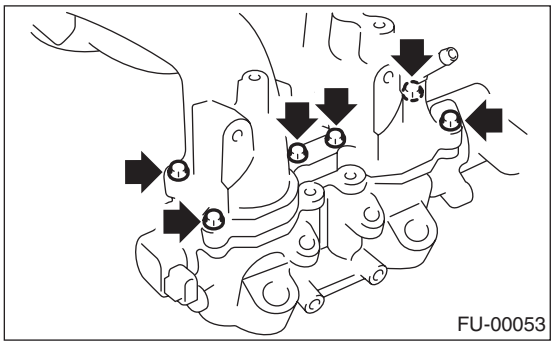

D: ASSEMBLY

NOTE:
Use a new gasket.

1) Install the tumble generator valve assembly onto intake manifold.

Tightening torque:
8.25 N·m (0.84 kgf-m, 6.1 ft-lb)

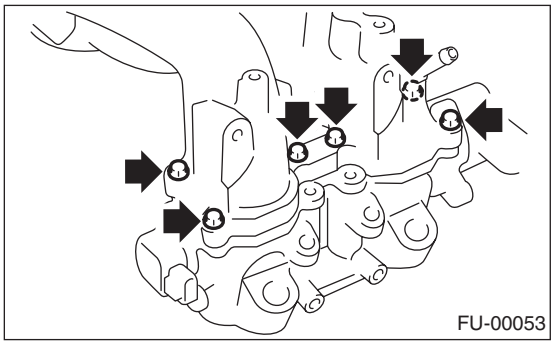

2) Install the air intake duct to the intake manifold.

Tightening torque:
19 N·m (1.94 kgf-m, 14.0 ft-lb)

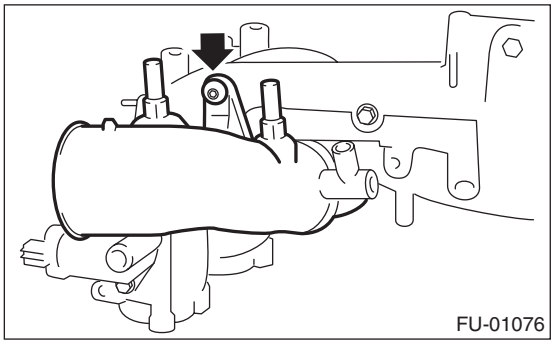

3) Install the fuel pipe assembly and pressure regulator to intake manifold.

Tightening torque:
6.4 N·m (0.65 kgf-m, 4.7 ft-lb)

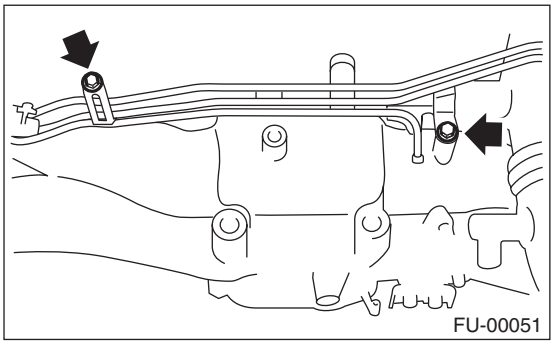

4) Install the fuel injector pipe LH.
5) Connect the fuel hose LH to the injector pipe, and tighten the clamp screw.

Tightening torque:
1.25 N·m (0.13 kgf-m, 0.94 ft-lb)

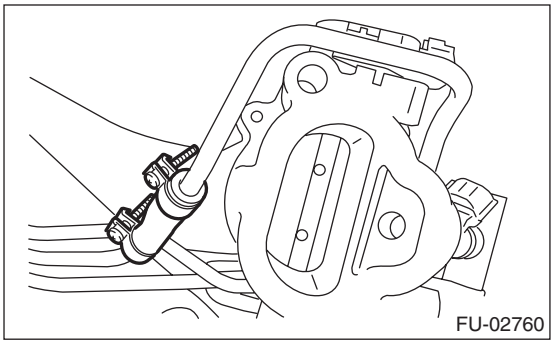

6) Install the fuel injector pipe RH.
7) Connect the fuel hose RH to the fuel injector pipe, and tighten the clamp screw.

Tightening torque:
1.25 N·m (0.13 kgf-m, 0.94 ft-lb)

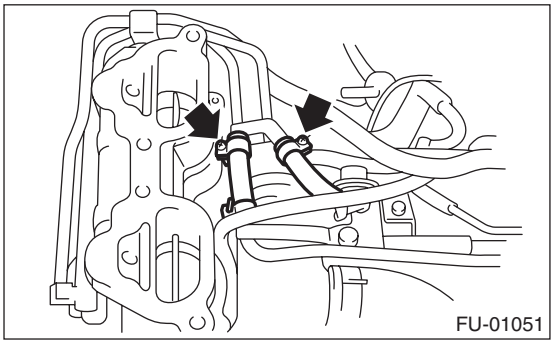

8) Install the engine harness to the intake manifold.

9) Install the harness bracket which holds the engine harness to intake manifold.

Tightening torque:
19 N·m (1.94 kgf-m, 14.0 ft-lb)

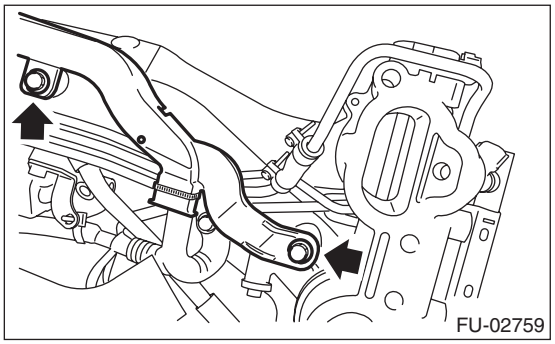

10) Install the fuel injector.

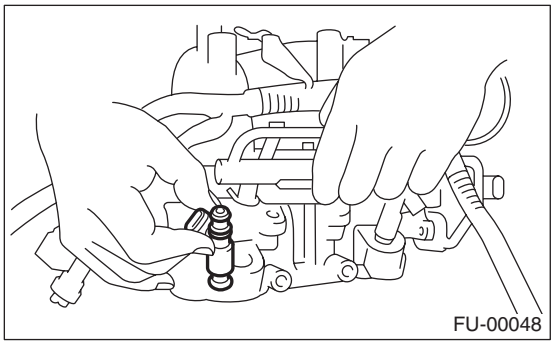

11) Tighten the bolts which secure fuel injector pipe onto intake manifold.

Tightening torque:
19 N·m (1.94 kgf-m, 14.0 ft-lb)

- LH side

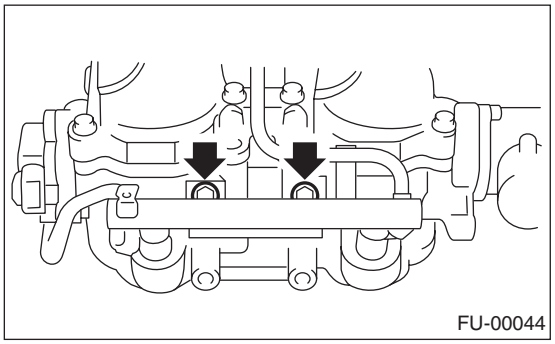

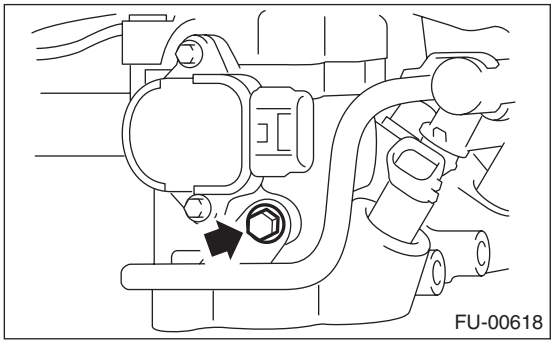

- RH side

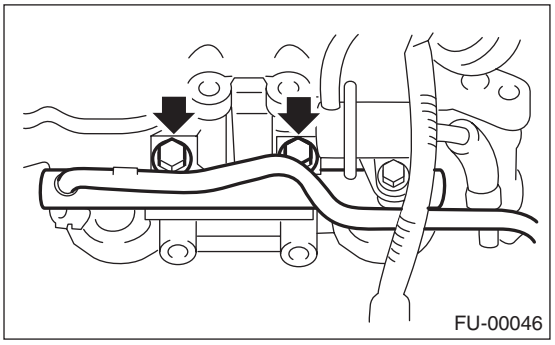

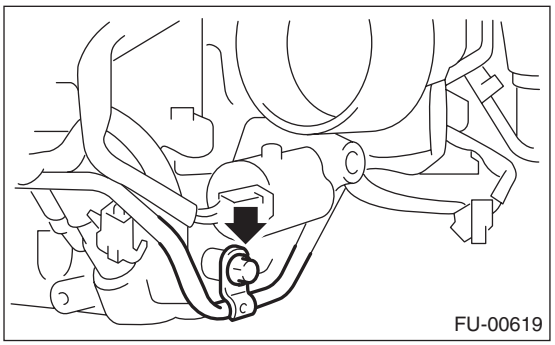

12) Tighten the two bolts which install the fuel pipe on the LH side of intake manifold.

Tightening torque:
6.4 N·m (0.65 kgf-m, 4.7 ft-lb)

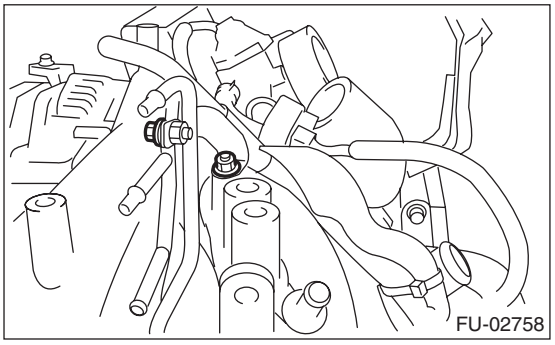

13) Install the purge control solenoid valve. <Ref. to EC(H4DOTC)-8, INSTALLATION, Purge Control Solenoid Valve.>

14) Connect the connector to the tumble generator valve assembly.

- Except for STI model

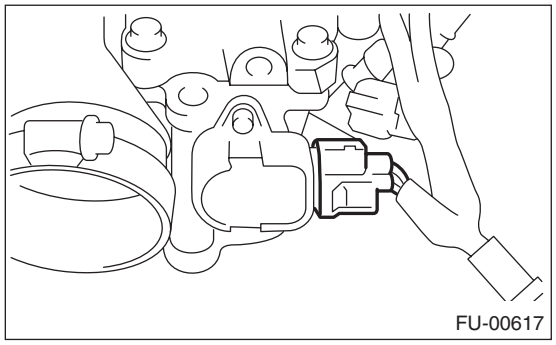
FU-00617

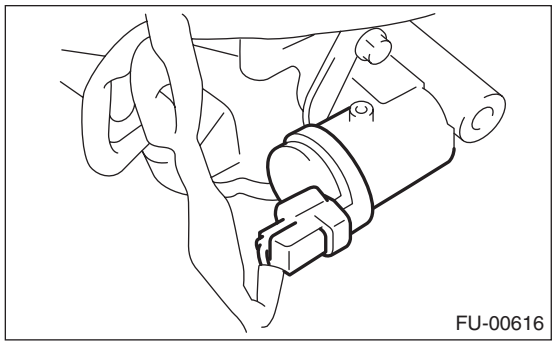
FU-00616

- STI model

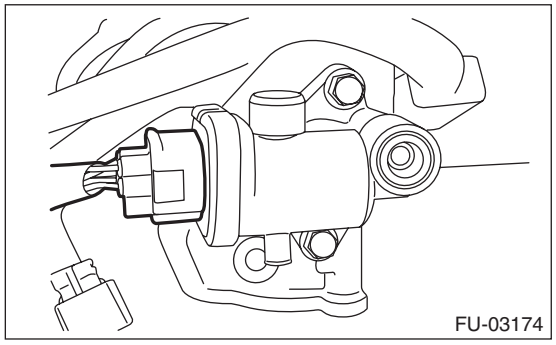
FU-03174

15) Connect the connector to the fuel injector.

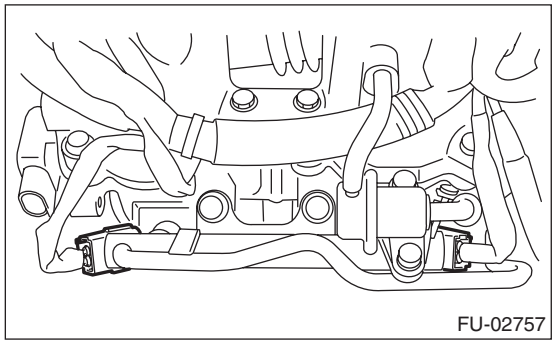
FU-02757

16) Install the throttle body to intake manifold.

NOTE:
Use a new gasket.

Tightening torque:
8 N·m (0.8 kgf-m, 5.8 ft-lb)

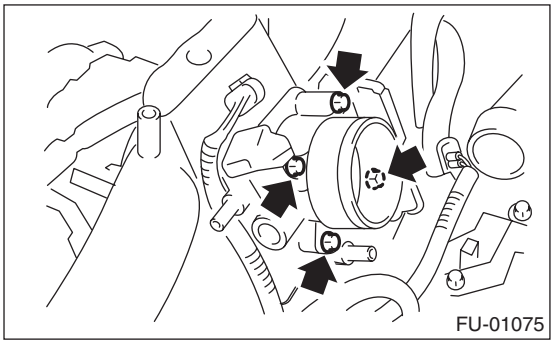
FU-01075

17) Connect the connector to the throttle position sensor (A), and the manifold pressure sensor (B).

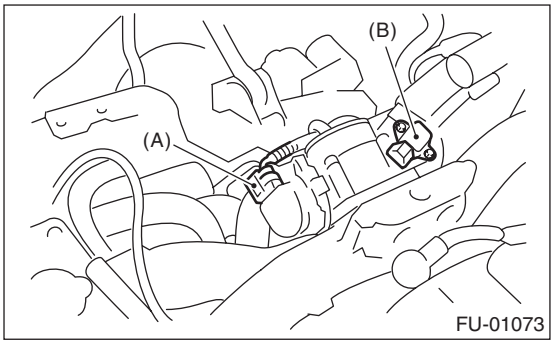

FU-01073

18) Install the engine ground terminal to the intake manifold.

Tightening torque:
19 N·m (1.94 kgf-m, 14.0 ft-lb)

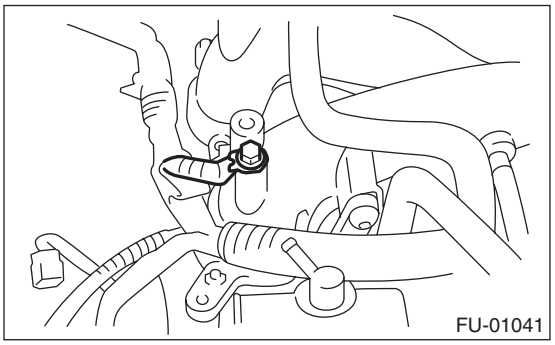
FU-01041

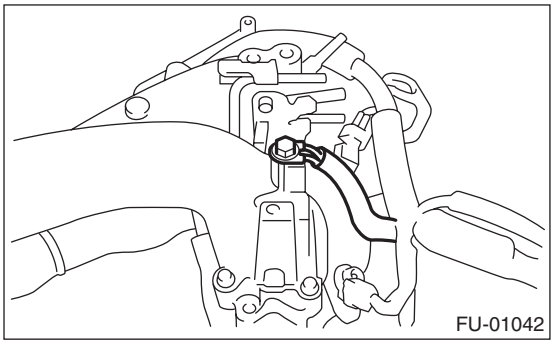
FU-01042

19) Install the fuel pipe protector RH.

Tightening torque:
19 N·m (1.94 kgf-m, 14.0 ft-lb)

- Except for STI model

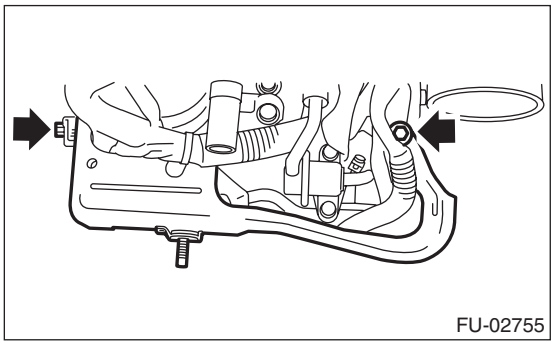

- STI model

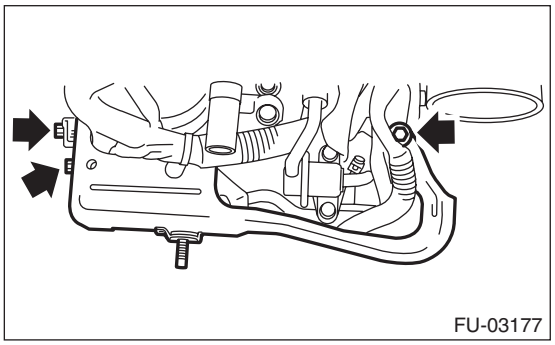

20) Install the fuel pipe protector LH.

Tightening torque:
19 N·m (1.94 kgf-m, 14.0 ft-lb)

- Except for STI model

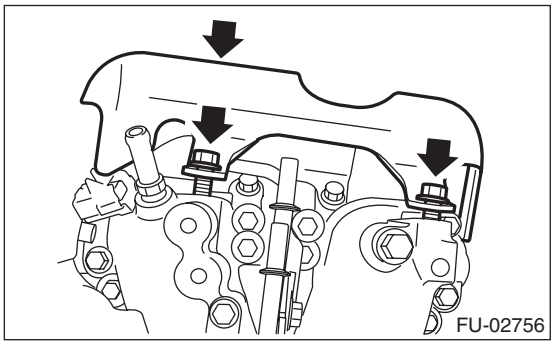

- STI model

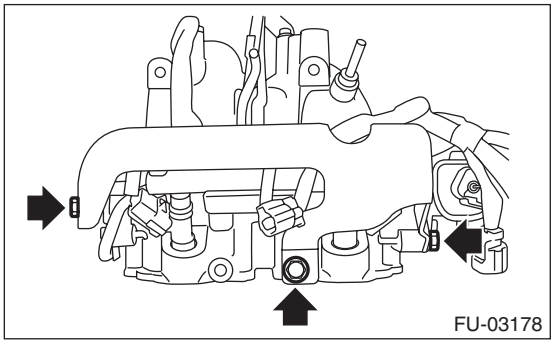

E: INSPECTION

Make sure that the fuel pipe and fuel hose are not cracked and that the connections are tight.